VOLVO PENTA

VOLVO PENTA **INBOARD DIESEL**

D8-550/600

7.7 liter, in-line 6 cylinder

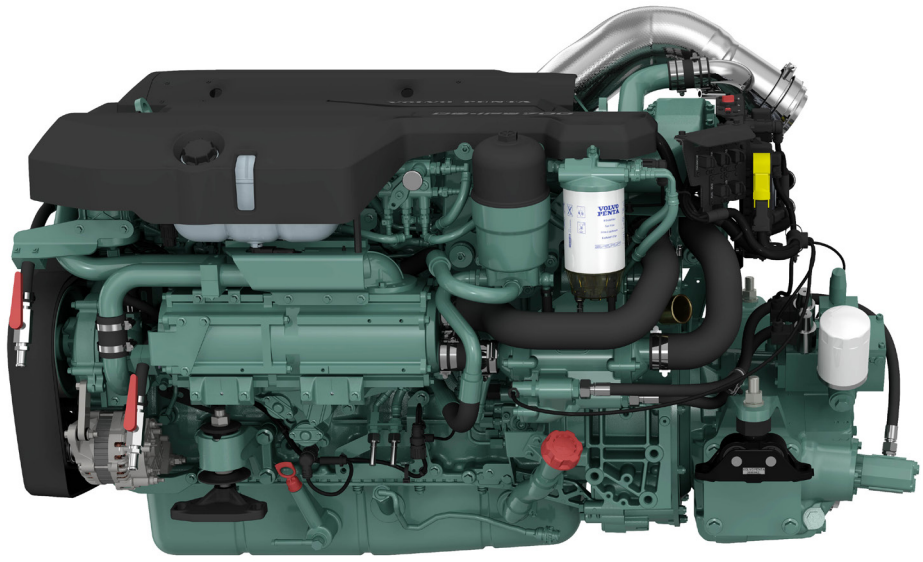

Technical data

Engine designation	D8-550	D8-600
No. of cylinders and configuration	in-line 6	in-line 6
Method of operation	4-stroke, direct-injected, turbo-charged diesel engine with aftercooler	
Bore / stroke, mm (in.)	110 / 135 (4.33 / 5.31)	
Displacement, l (in^3)	7.7 (469.7)	7.7 (469.7)
Compression ratio	16.5:1	16.5:1
Dry weight bobtail, kg (lb)	840 (1852)	840 (1852)
Crankshaft power, kW (hp)	405 (550) @ 2900 rpm	441 (600) @ 3000 rpm
Max. torque, Nm (lbf.ft)	1665 (1228) @ 1700 rpm	1755 (1294) @ 2000 rpm
Emission compliance	IMO NOx, EU RCD Stage II, US EPA Tier 3	
Rating	R5	R5
Recommended fuel to conform to	ASTM-D975 1-D & 2-D, EN 590 or JIS KK 2204	
Specific fuel consumption, g/kWh (lb/hph) @ 2400 rpm	205 (0.332)	207 (0.335)
Flywheel housing/SAE size	11.5”/SAE 2	11.5”/SAE 2

Technical data according to ISO 8665. With fuel having an LHV of 42700 kJ/kg and density of 840 g/liter at 15 °C (60 °F). Merchant fuel may differ from this specification which will influence engine power output and fuel consumption.

Power

1. Crankshaft power
2. Propellershaft power at prop. load x^{2,5}

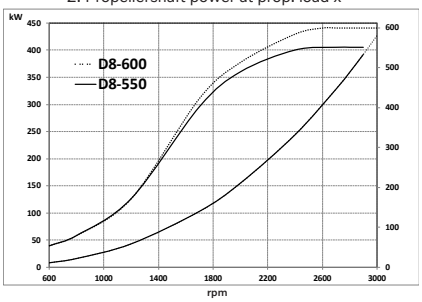

Torque

Torque measured at crankshaft

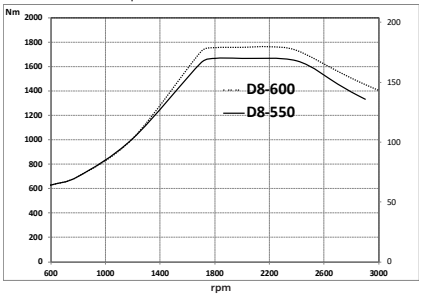

Fuel consumption

At calculated propeller load exp. 2.5

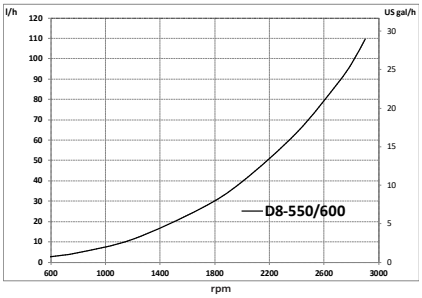

D8-550/600

7.7 liter, in-line 6 cylinder

Technical description

Engine and block
- Cylinder block made of cast iron
- One-piece cast-iron cylinder head
- Ladder frame fitted to engine block
- Replaceable dry cylinder liners and valve seats/guides
- Drop forged crankshaft with induction hardened bearing surfaces and fillets with seven main bearings
- Four-valve-per-cylinder layout with overhead camshaft.
- Each cylinder features cross-flow inlet and exhaust ducts
- Gallery oil-cooled cast aluminum alloy pistons with three piston rings
- Rear-end transmission

Engine mounting
- Flexible engine mounting (option)

Lubrication system
- Seawater-cooled tubular oil cooler
- Single cartridge type oil filter, easy to replace, with no spillage

Fuel system
- Common rail fuel injection system
- Gear-driven fuel pump and injection timing
- Electronically controlled central processing system (EMS – Engine Management System)
- Single fine fuel filter of spin-on type, with water separator and water alarm

Air inlet and exhaust system
- Mid-positioned twin entry turbocharger with aftercooler
- Air filter with replaceable inserts
- Wet exhaust elbow (option)
- Loss of sea water alarm

Cooling system
- Seawater-cooled tubular heat exchanger
- Coolant system prepared for hot water outlet
- Easily accessible seawater impeller pump in rear end

Electrical system
- 24V with extra 12V/115A or 24V/110A Iternator



Electronic Vessel Control (EVC)
- Fully integrates the engines, electronics and the unique set of EVC features; Joystick Docking (available for twin engine installations), Glass Cockpit and more

Reverse gear
- ZF reverse gears, with low speed as option, electronically shifted
- Connection kits for Twin disc available

Dimensions D8-550/600 with ZF286A

Not for installation, mm [in.]

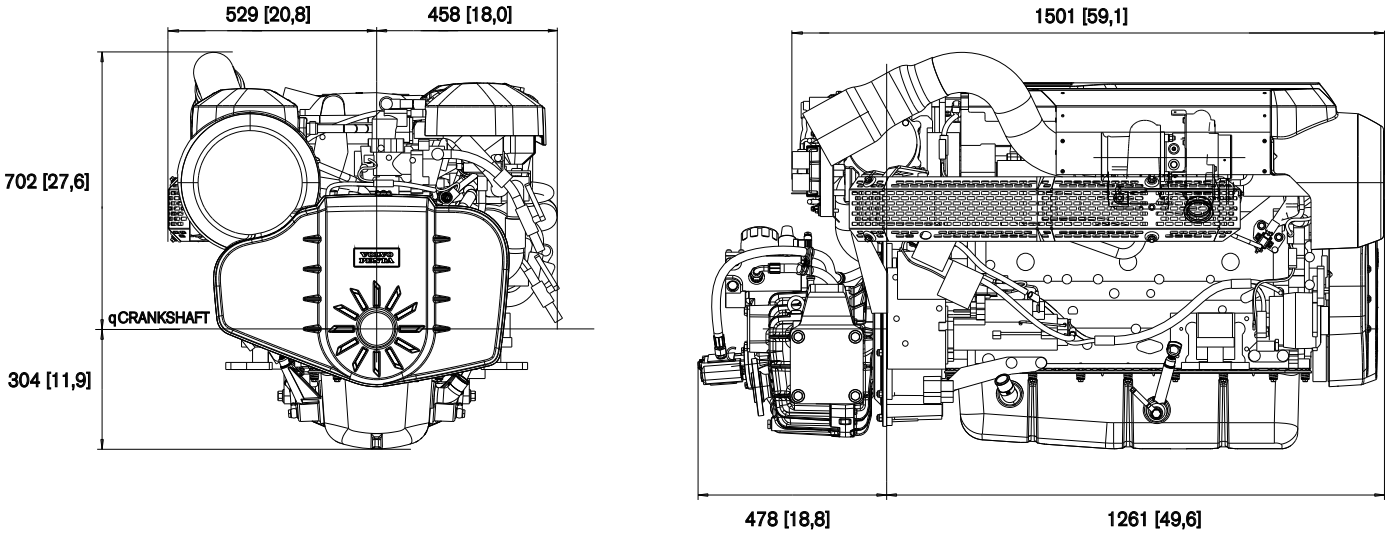

Not all models, standard equipment and accessories are available in all countries. All specifications are subject to change without notice. The engine illustrated may not be entirely identical to production standard engines.

Contact your local Volvo Penta dealer for more information regarding Volvo Penta engines and optional equipment/ accessories or visit www.volvopenta.com

AB Volvo Penta
SE-405 08 Göteborg, Sweden
www.volvopenta.com

English 02-2021 © 2021 AB Volvo Penta.