VOLVO PENTA **INBOARD DIESEL**

D16-MH

16.1 liter, in-line 6 cylinder



Technical Data

Engine designation	D16 MH				
Configuration	in-line 6				
Method of operation	4-stroke, direct-injected, turbocharged diesel engine with charge air cooler				
Bore/stroke, mm (in.)	144/165 (5.67/6.50)				
Displacement, l (in³)	16.1 (983.9)				
Compression ratio	16.8:1				
Dry weight bobtail (HE), kg (lb)	1810 (3990)				
	Rating 1 1800 rpm	Rating 1 1800 rpm	Rating 1 1900 rpm	Rating 2 1900 rpm	Rating 2 1900 rpm
Crankshaft power, kW (hp)	441 (600)	478 (650)	551 (750)	588 (800)	625 (850)
Max. torque, Nm (lbf.ft) @ 1200 rpm	3096 (2283)	3265 (2406)	3270 (2412)	-	-
@ 1400 rpm	-	-	-	3524 (2598)	3747 (2763)
Emission compliance	IMO Tier II	IMO Tier II	IMO Tier II	IMO Tier II	IMO Tier II
Recommended fuel to conform to	ASTM-D975 1-D & 2-D, EN 590 or JIS KK 2204.				
Flywheel housing/SAE size	14”/SAE1				

Technical data according to ISO 3046 Fuel Stop Power and ISO 8665. Fuel with a lower calorific value of 42700 kJ/kg and density of 840 g/liter at 15 °C (60 °F). Merchant fuel may differ from this specification which will influence engine power output and fuel consumption. Ratings R1 & R2, see explanation in Volvo Penta’s Product Guide.

Power

1. Crankshaft power
2. Propellershaft power at prop. load x$^{3.0}$

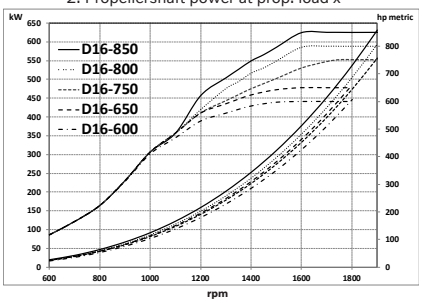

Torque

Torque measured at crankshaft

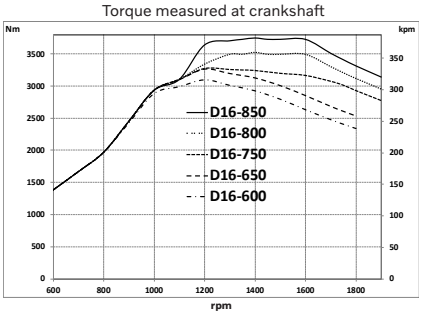

Fuel consumption

At calculated propeller load x$^{3.0}$

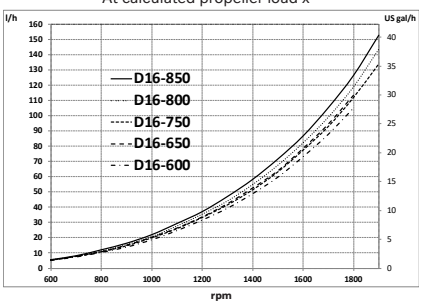

D16-MH

16.1 liter, in-line 6 cylinder

Technical description

Engine and block
- Cylinder block and cylinder head made of cast-iron
- One-piece cast-iron cylinder head
- Ladder frame fitted to engine block
- Replaceable wet cylinder liners and valve seats/guides
- Drop forged crankshaft with induction hardened bearing surfaces and fillets with seven main bearings
- Four valve per cylinder layout with overhead camshaft
- Each cylinder features cross-flow inlet and exhaust ducts
- Gallery oil-cooled cast steel pistons with three piston rings
- Rear-end transmission
- Closed crankcase ventilation

Engine mounting
- Flexible engine mounting (option)

Lubrication system
- Integrated oil cooler in cylinder block
- Twin full flow oil filters and by-pass filters of spin-on type

Fuel system
- Electronic Unit Injectors, one per cylinder, vertically positioned at the center in between the four valves
- 6-hole high pressure injector nozzles
- Gear-driven fuel pump, driven by timing gear
- Electronically controlled central processing system (EMS – Engine Management System)
- Electronically controlled injection timing
- Twin spin-on fine fuel filters with change over valve

Air inlet and exhaust system
- Twin replaceable air filters
- Twin parallell turbocharger with water-cooled turbine housing and wastegate

Cooling system
- Freshwater-cooled charge air cooler
- Seawater-cooled plate heat exchanger
- Coolant system prepared for hot water outlet
- Seawater impeller pump
- Electrically controlled two stage fresh water pump

Electrical system
- 24V/110A alternator

Instruments/controls
- Three options for onboard electronic control:
  1. EVC (Electronic Vessel Control), a type-approved system with integrated controls and features.
  2. MCC (Marine Commercial Control), an open system that is type-approved. Incl. separate safety shutdown system
  3. Open CAN Interface, engine delivered without control system. Different options with or without shut down senders and switches.

Dimensions

Not for installation, mm

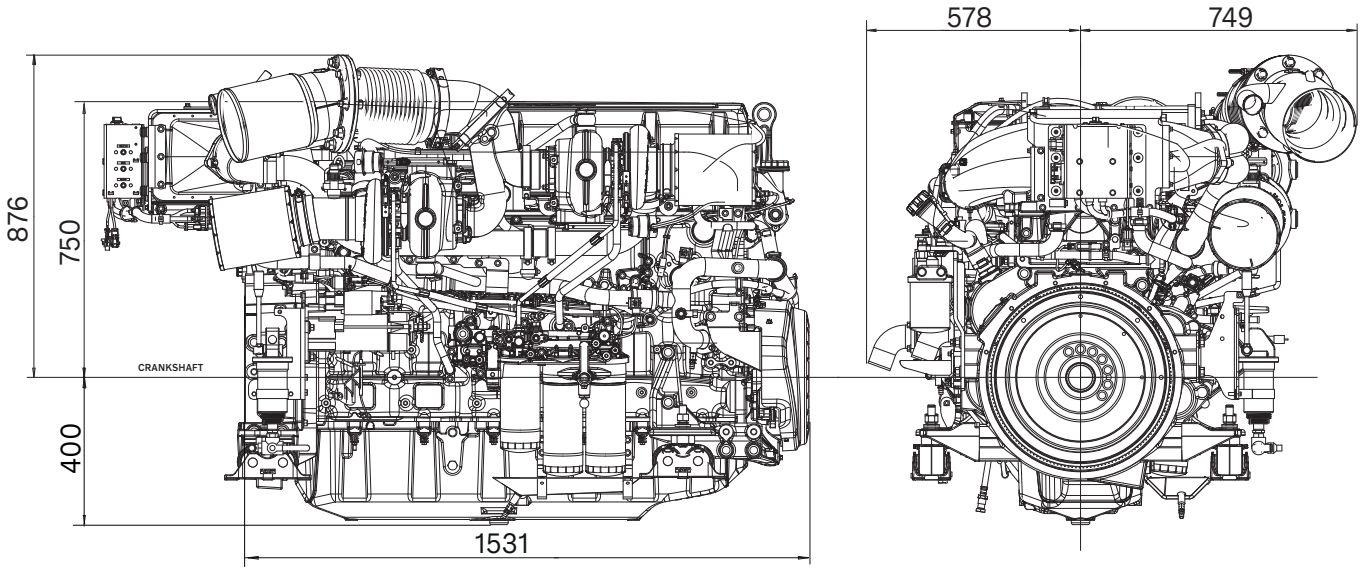

Not all models, standard equipment and accessories are available in all countries. All specifications are subject to change without notice. The engine illustrated may not be entirely identical to production standard engines.

Contact your local Volvo Penta dealer for more information regarding Volvo Penta engines and optional equipment/ accessories or visit www.volvopenta.com

IOS Android

Download the Volvo Penta dealer locator App for your IPhone or Android

AB Volvo Penta
SE-405 08 Göteborg, Sweden
www.volvopenta.com

English 01-2021 © 2021 AB Volvo Penta.