VOLVO PENTA

VOLVO PENTA INBOARD DIESEL

D13-MH (FE)

12.78 liter, in-line 6 cylinder
Emission compliance: IMO Tier II

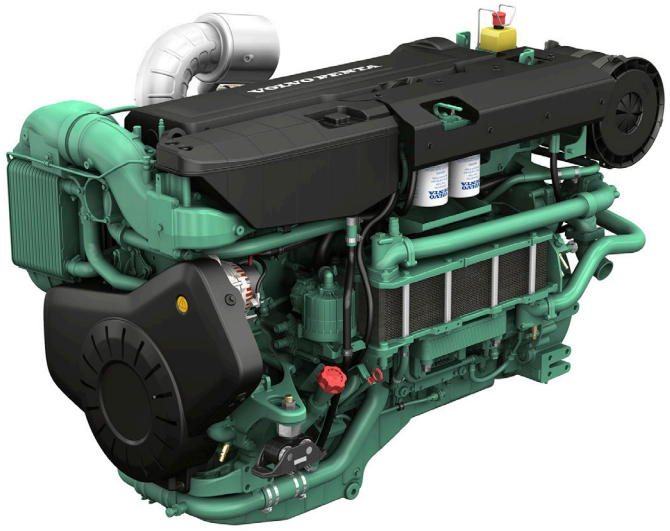

Technical Data

Engine designation	D13 MH					
No. of cylinders and configuration	in-line 6					
Method of operation	4-stroke, direct-injected, turbocharged diesel engine with charge air cooler					
Bore/stroke, mm (in.)	131/158 (5.16/6.22)					
Displacement, l (in³)	12.78 (779.7)					
Compression ratio	18.5					
Dry weight bobtail (KC), kg (lb)	1480 (3263)					
Dry weight bobtail (HE), kg (lb)	1520 (3351)					
	Rating 1 1800 rpm	Rating 1 1800 rpm	Rating 1 1800 rpm	Rating 1 1800 rpm	Rating 2 1900 rpm	Rating 2 1900 rpm
Crankshaft power, kW (hp)	214 (291)	294 (400)	331 (450)	368 (500)	405 (550)	441 (600)
Max. torque, Nm (lbf.ft) @ 1400 rpm	1731* (1277)*	1756 (1295)	1975 (1457)	2164 (1596)	2363 (1743)	2399 (1769)
Specific fuel consumption,						
g/kWh (lb/hph) @1400 rpm	198 (0.32)	192 (0.31)	191 (0.31)	190 (0.31)	191 (0.31)	189 (0.31)
g/kWh (lb/hph) @1800 rpm	207 (0.34)	200 (0.32)	200 (0.32)	199 (0.32)	200 (0.32)	202 (0.33)
Emission compliance	IMO Tier II	IMO Tier II	IMO Tier II	IMO Tier II	IMO Tier II	IMO Tier II
Recommended fuel to conform to	ASTM-D975 1-D & 2-D, EN 590 or JIS KK 2204					
Flywheel housing/SAE size	14”/SAE1					

Technical data according to ISO 3046 Fuel Stop Power and ISO 8665. Fuel with a lower calorific value of 42700 kJ/kg and density of 840 g/liter at 15 °C (60 °F). Merchant fuel may differ from this specification which will influence engine power output and fuel consumption. Ratings R1 & R2, see explanation in Volvo Penta’s Product Guide.
* @ 800rpm

Power
1. Crankshaft power
2. Propellershaft power at prop. load $x^{3.0}$

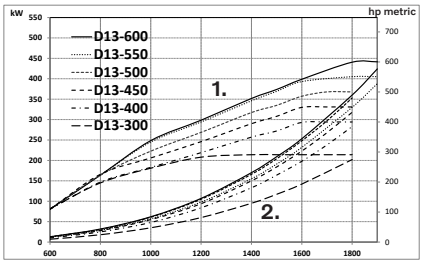

Torque
Torque measured at crankshaft

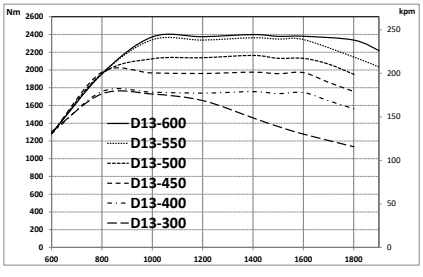

Fuel consumption
At calculated propeller load $x^{3.0}$

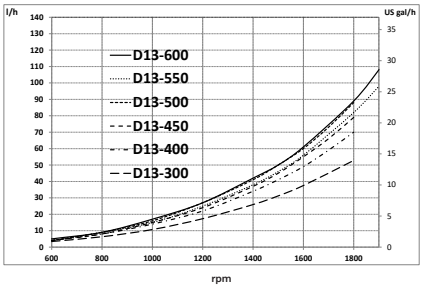

D13-MH (FE)

12.78 liter, in-line 6 cylinder
Emission compliance: IMO Tier II

Technical description

Engine and block
- Cylinder block and cylinder head made of cast-iron
- One-piece cast-iron cylinder head
- Ladder frame fitted to engine block
- Replaceable wet cylinder liners and valve seats/guides
- Drop forged crankshaft with induction hardened bearing surfaces and fillets with seven main bearings
- Four valve per cylinder layout with overhead camshaft
- Each cylinder features cross-flow inlet and exhaust ducts
- Gallery oil-cooled cast aluminum alloy pistons with three piston rings
- Rear-end transmission

Engine mounting
- Flexible engine mounting (option)

Lubrication system
- Integrated oil cooler in cylinder block
- Twin full flow oil filters and by-pass filters of spin-on type

Fuel system
- Electronic Unit Injectors, one per cylinder, vertically positioned at the center in between the four valves
- 5-hole high pressure injector nozzles
- Gear-driven fuel pump, driven by timing gear
- Electronically controlled central processing system (EMS – Engine Management System)
- Electronically controlled injection timing
- Twin spin-on fine fuel filters with change over valve

Air inlet and exhaust system
- Air filter with replaceable inserts
- Mid-positioned twin entry turbocharger and charge air cooler

Cooling system
- Freshwater-cooled charge air cooler
- Seawater-cooled plate heat exchanger
- Coolant system prepared for hot water outlet
- Easily accessible seawater impeller pump in rear end

Electrical system
- 24V/110A alternator

Instruments/controls (option)
- Complete instrumentation including key switch and interlocked alarm
- EVC monitoring panels for single or twin installations
- Electronic remote control for throttle and shift
- Plug-in connections
- SDU shutdown unit for classified installations
- MCC – Marine Control System

Dimensions

Not for installation, mm [in.]

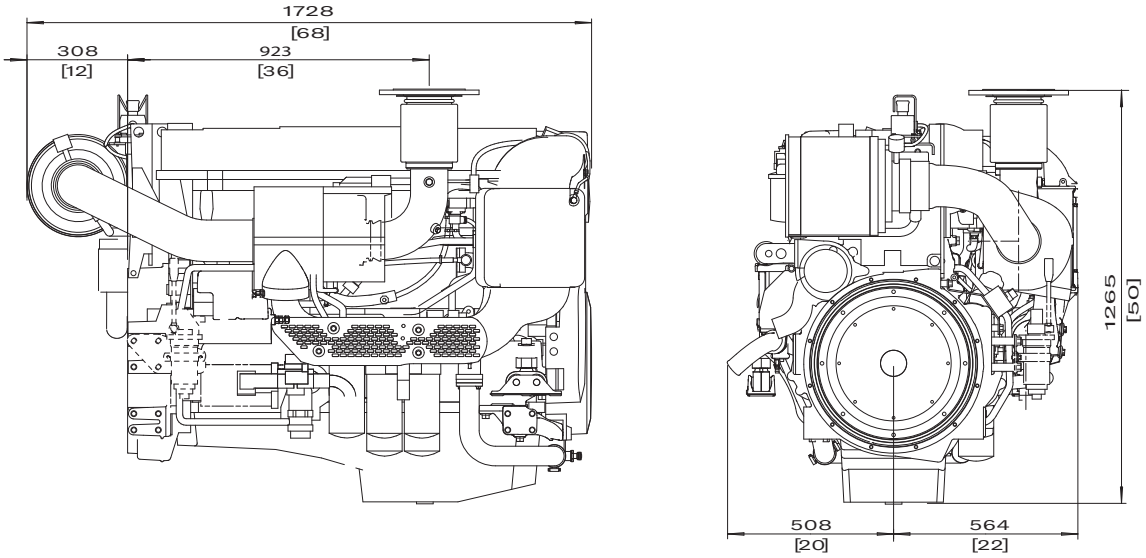

Not all models, standard equipment and accessories are available in all countries. All specifications are subject to change without notice. The engine illustrated may not be entirely identical to production standard engines.

Contact your local Volvo Penta dealer for more information regarding Volvo Penta engines and optional equipment/ accessories or visit www.volvopenta.com

AB Volvo Penta
SE-405 08 Göteborg, Sweden
www.volvopenta.com

English 09-2022 © 2022 AB Volvo Penta.