VOLVO PENTA

VOLVO PENTA **INBOARD DIESEL**

D1-30

1.13 liter, in-line 3 cylinder

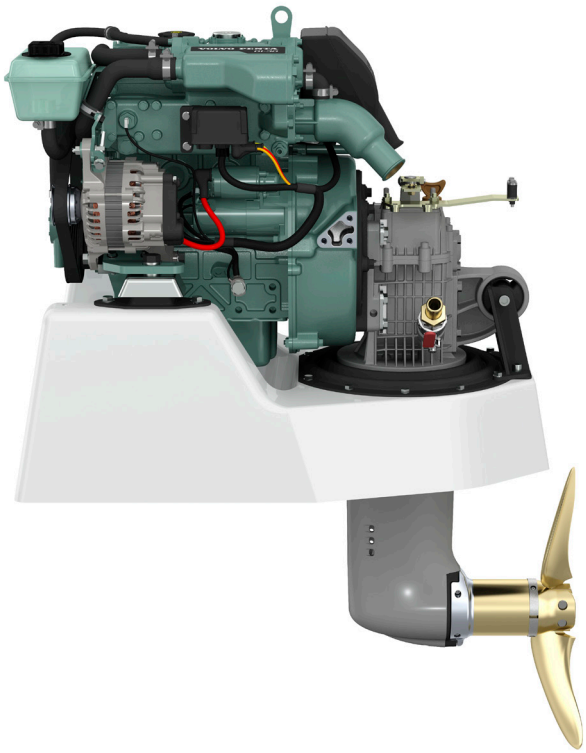

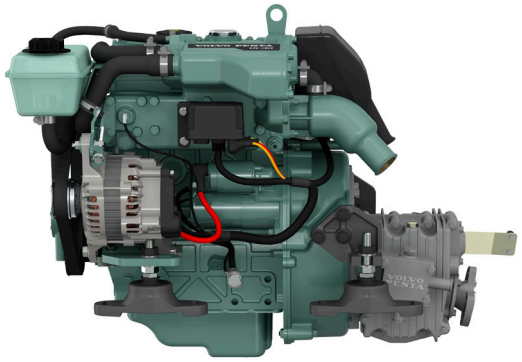

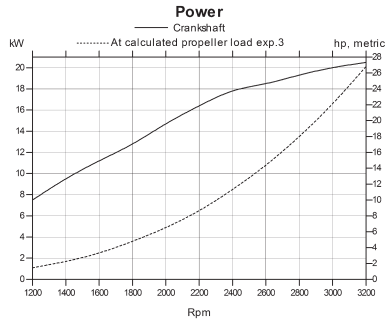

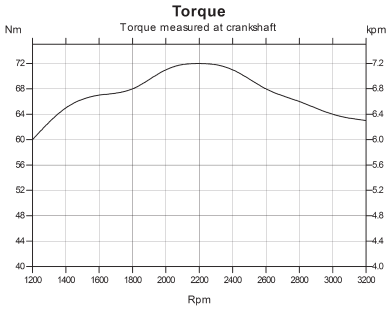

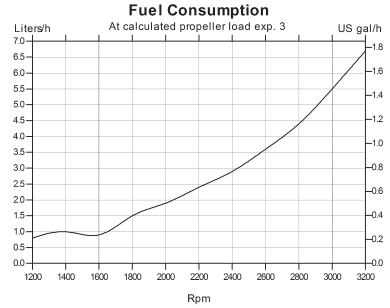

Technical Data

Engine designation	D1-30
Crankshaft power, kW (hp)	20 (27)
Propeller shaft power, kW (hp)	19 (26)
Engine speed, rpm	2800–3200
Displacement, l (in^3)	1.13 (69)
Number of cylinders	3
Bore/stroke, mm (in.)	77/81 (3.03/3.19)
Compression ratio	23.5:1
Dry weight with reverse gear MS15A/MS15L, kg (lb)	140/140 (309/309)
Dry weight with saildrive 130S, kg (lb)	158 (348)
Emission compliance	BSO, EU RCD Stage II, US EPA Tier 3
Rating	R5*

Technical data according to ISO 8665. With fuel having an LHV of 42700 kJ/kg and density of 840 g/liter at 15 °C (60 °F). Merchant fuel may differ from this specification which will influence engine power output and fuel consumption.

*RATING 5. For pleasure craft applications, and can be used for high speed planing crafts in commercial applications

D1-30

1.13 liter, in-line 3 cylinder

Technical description

Engine block and head
- Cylinder block and cylinder head manufactured from high grade cast iron. Crankcase features a rigid tunnel block design.
- Chrome molybdenum forged crankshaft, statically and dynamically balanced with integral counterweights. Pistons are cast from high silicon aluminum, are heat treated and fitted with two cast iron, chromium faced compression rings and a single oil ring.
- Replaceable, hardened valve seats
- Elastic coupling on flywheel

Engine mounting
- Tuned front and rear cushion-type rubber mounts. Adjustable.

Lubrication system
- Spin-on fullflow oil filter
- Separate oil scavenger pipe
- Closed circuit crankcase ventilation
- One top and one side oil filling position

Fuel system
- Flange mounted, cam driven in-line injection pump
- Feed pump with hand primer
- Spin-on type fine fuel filter
- Auxiliary stop button on engine

Exhaust system
- Freshwater cooled exhaust manifold and seawater cooled exhaust elbow

Cooling system
- Freshwater cooling system governed by thermostat
- Tubular heat exchanger with integral expansion tank
- Easily accessible sea water pump and impeller

Electrical system
- 12V corrosion-protected electrical system
- 14V/115A marine alternator
- Charging regulator with electronic sensor for voltage drop compensation
- Glow plugs for excellent cold starting
- Electric starter motor
- Electrical stop function
- Extension cable harness with plug-in connection available in various lengths

EVC instruments
- Start/stop panel
- Tachometer with alarms and engine hour counter

Options:
- Separate instruments for:
  – Fuel level
  – Temperature
  – Voltage
- LCD display with multisensor
- NMEA interface presenting engine data on chart plotters

Choice of transmissions
- Housing of gravity die-cast aluminum alloy
- Mechanical multiple-disc clutch shift
- Safety coupling with built-in overload protection

MS15A – reverse gear with 8° down angle output.
- Ratio 2.14:1/1.95:1 (RH/LH) and 2.63:1/1.95:1 (RH/LH).

MS15L – reverse gear with straight output.
- Ratio 2.14:1/1.95:1 (RH/LH) and 2.63:1/1.95:1 (RH/LH).

S-drive 130S and **130SR** for reverse installation of engine. Ratio 2.19:1.

Accessories
- Engine controls and steering systems
- Battery and battery switches
- Hot water systems
- Separate expansion tanks
- Cooling water seacocks, strainers and hoses
- Exhaust systems and hull fittings
- Fuel systems including filters, pipes etc.
- Propeller shaft systems and propellers
- Chemical products – paints, oils, cleaners etc.

Dimensions D1-30/MS15A/130S

Not for installation

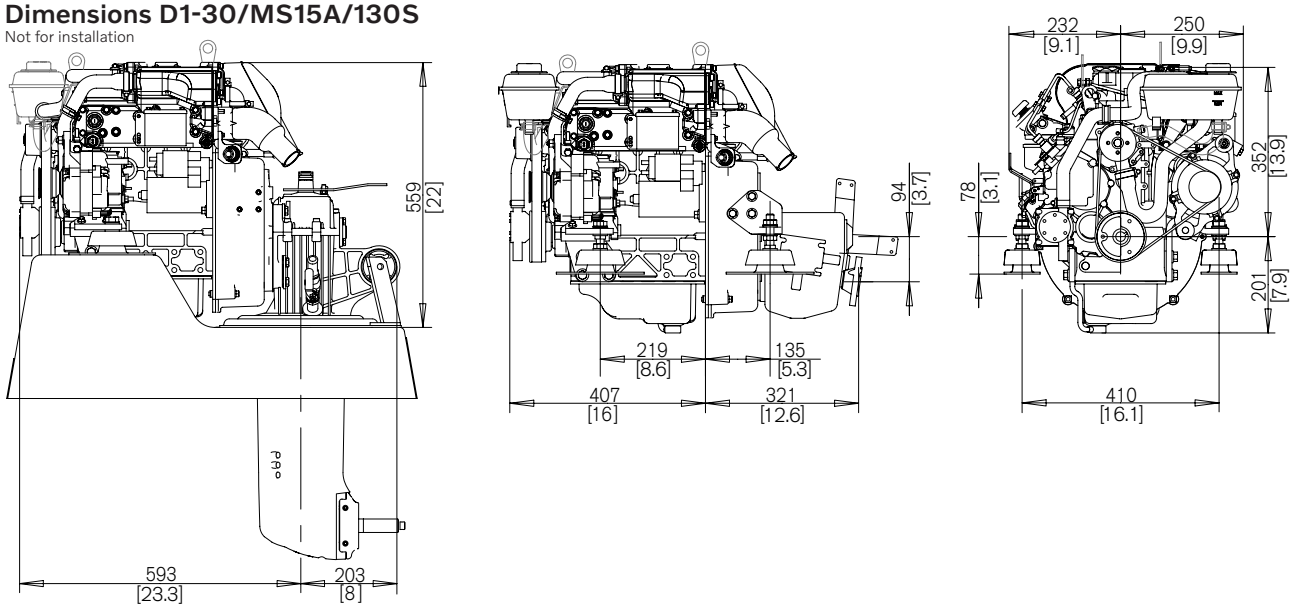

Not all models, standard equipment and accessories are available in all countries. All specifications are subject to change without notice. The engine illustrated may not be entirely identical to production standard engines.

Contact your local Volvo Penta dealer for more information regarding Volvo Penta engines and optional equipment/ accessories or visit www.volvopenta.com

AB Volvo Penta
SE-405 08 Göteborg, Sweden
www.volvopenta.com

English 12-2016 © 2016 AB Volvo Penta.