VOLVO PENTA

VOLVO PENTA **IPS HYBRID**

D13-IPS 900/1050/1200/1200SD/1350/1350SD HYBRID

Emission compliance: IMO NOx, EU RCD Stage II, US EPA Tier 3, China 2

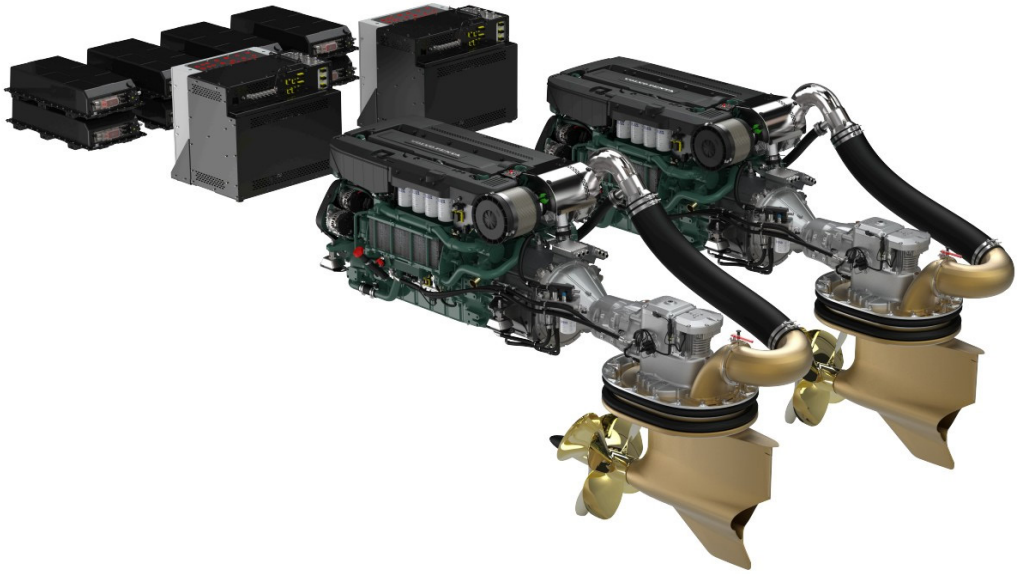

General Data

System designation	D13-IPS900H	D13-IPS1050H	D13-IPS1200H	D13-IPS1350H
Diesel engine Power	515 kW	588 kW	662 kW	735 kW
Electric motor power	160kW			
Propshaft power	485 (659) @2250 rpm	554 (753) @2300 rpm	624 (848) @2300 rpm	693 (942) @2400 rpm
ePTO 24V*	27,6V och 200A			
ePTO AC*	3-phase 380 to 481 V, 50/60 Hz, max 63 A/phase, max 43.6 kVA			
Shore charging power*	CCS2, 43 kW AC, 215 kW DC			
Generator charging power*	Under way 200 kW, Lying still 270 kW			
Battery system*	LFP, 2C, Small pack 147 kWh, Large pack 221 kWh			
Rating	3	4	5	5
Dry weight Propulsion package	approx 2835 kg			
Dry weight PDU*	320 kg			
Dry weight Battery system*	1320 kg (small system), 1950 kg (large system)			
Dry weight Distributed cabinets*	210 kg			
Propulsion battery system voltage*	618 V			
Low voltage	24 V			
Emission complience	IMO NOx, EU RCD Stage II, US EPA Tier 3, China 2			
Application	Twin/Triple/Quad			
Speed range	19 to 39 knots	19 to 42 knots	18 to 42 knots	19 to 44 knots

**Only applicable on Volvo Penta DC grid*

Power
1. Crankshaft power
2. Propellershaft power at prop. load x 2,5

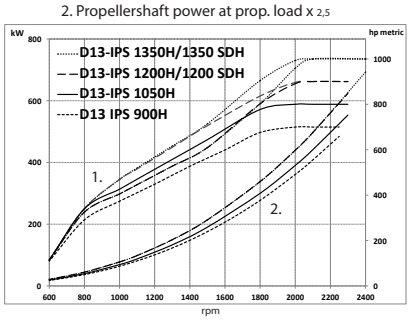

Torque
Torque measured at crankshaft

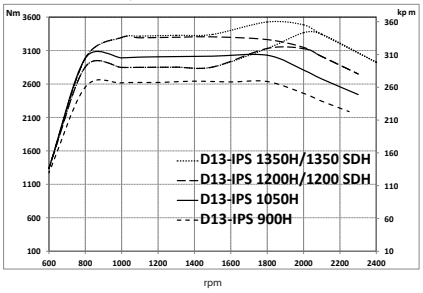

Fuel consumption
At calculated propeller load exp. 2.5

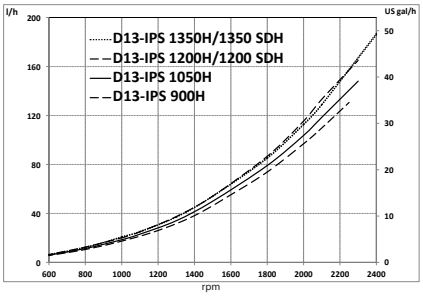

D13-IPS 900/1050/1200/1200SD/1350/1350SD HYBRID

Emission compliance: IMO NOx, EU RCD Stage II, US EPA Tier 3, China 2

Technical description

Electric Machine
- Synchronous Reluctance assisted Permanent Magnet (SRPM) technology
- Liquid-cooled
- Approved for marine use (DNV - TAC)

EMD
- Compact design weighing 14kg
- High enclosure class IP6K9K, sealed from moisture and dust
- Ambient temperature up to +105°C and down to -40°C
- Coolant temperature up to +65°C
- Robust design withstanding high levels of mechanical vibrations and shocks
- Designed specifically for the highly cyclical loads typical in heavy mobile work machines

Power distribution unit
- Compact design that reduces installation space
- Ingoing components and cabinets are IP rated, not the PDU assembly.
- Variable cable lengths – outside PDU
- Dimensions: 950 x 800 x 850 mm
- Weight: 330 kg
- Includes DC-Grid, 24V distribution, 24V DCDC, ePTO, Charger

ePTO
- Liquid cooled (water-glycol mixture)
- 3-phase 380 to 481 V, 50/60 Hz, max 63 A/phase, max 43.6 kVA
- TN and IT (3 phases + N + PE)
- IP6K9K (connectors mated)
- R10 certified; CE marked
- 3-phase EMC filter cabinet for AC ePTO
- Basic isolation according to ISO 17409:2020

Charging
- CCS2 inlet
- AC charging (single-phase and three-phase) up to 63 A per phase and up to 43.6 kVA
- Basic isolation according to ISO 17409:2020
- Liquid cooled (water-glycol mixture)
- DC Charging system: max 330A (~215kW)
- Limited to 100 kW for DNV classified installations
- Fixed lengths on the DC and AC (2.5, 5, 7.5, 10, 15 and 20m)

24V DCDC
- Max Power Output 5,5 kW
- 27,6 V Output Voltage
- Max DC Current of 200 A
- TVS is galvanic isolated from 24V system
- Ambient temp -40C to +85C
- IP67 & IP6K9K
- Liquid cooling (65degC)

Battery
- LFP chemistry
- Liquid cooled (water-glycol mixture)
- Two variants, 147 kWh or 221 kWh total energy
- 2C continuous charge and discharge rate
- DNV Type approved
- Metal rack and hydromounts, for tough marine shock and vibrations

MACU
- Marine Cooling Unit is the thermal management of ESS & MDS
- Pump power automatically matches cooling demand
- Detects blockages and air, self-purges to maintain operation
- 3-way valve regulates ESS cooling based on thermal load
- Integrated leakage detection with alert function

Third party integration
- Energy management handled by third party Nominal fixed voltage 770 VDC
- Recieving data Modbus TCP for showing in 24” display
- Transmitting data on NMEA2000

1. Combustion engine
2. Hydraulic clutch
3. Electric machine
4. IPS drive
5. Pump Hydraulic clutch
6. Manifold Hydraulic clutch
7. SUS Power supply
8. Isolator breaker box (IBB)
9. Electric motor drive (EMD)
10. Shutdown cabinet (SDC), optional
11. Propulsion Control Cabinet (PCC)
12. Local Control Cabinet (LCC), optional
13. ePTO Filter
14. Charging inlet (CCS2)
15. Battery modules
16. Low Voltage Isolation Box (LVIB)
17. Service Box (S-Box)
18. Overcharge Protection Unit (OPU)
19. Marine cooling unit (MaCU)
20. Power distribution unit (PDU)

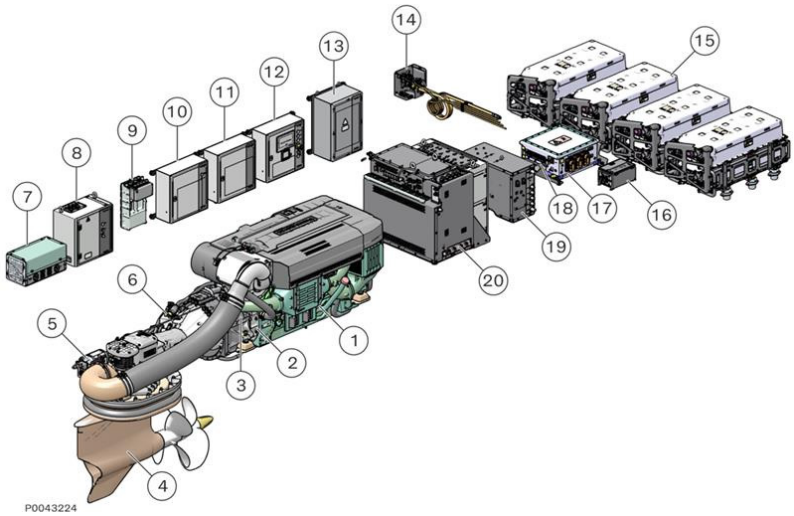

AB Volvo Penta
SE-405 08 Göteborg, Sweden
www.volvopenta.com

D13-IPS 900/1050/1200/1200SD/1350/1350SD HYBRID

Emission compliance: IMO NOx, EU RCD Stage II, US EPA Tier 3, China 2

Technical description Diesel

Engine and block
- Cylinder block made of cast iron
- One-piece cast-iron cylinder head
- Ladder frame fitted to engine block
- Replaceable wet cylinder liners and valve seats/guides
- Drop forged crankshaft with induction hardened bearing surfaces and fillets with seven main bearings
- Four-valve-per-cylinder layout with over-head camshaft and center position of unit injectors
- Each cylinder features cross-flow inlet and exhaust ducts
- Monotherm steel pistons
- Rear-end transmission

Engine mounting
- Flexible engine mounting

Lubrication system
- Integrated oil cooler in cylinder block
- Rear positioned twin full flow oil filter of spin-on type and by-pass filter

Fuel system
- Electronic high pressure unit injectors
- Gear-driven fuel pump and injection timing
- Electronically controlled central processing system (EMS – Engine Management System)
- Single fine fuel filter of spin-on type

Air inlet and exhaust system
- Twin entry turbo technology with freshwater-cooled charge air cooler
- Air filter with replaceable inserts
- Wet exhaust riser
- Loss of sea water alarm

Cooling system
- Seawater-cooled plate heat exchanger
- Coolant system prepared for hot water outlet
- Easily accessible seawater pump in rear end of flywheel housing

Electrical system
- 24V/110A plus an optional extra 12V/115A alternator

IPS transmission
- Forward-facing, twin counter-rotating propellers
- Electronic steering, enable features such as joystick maeuvering
- Integrated exhaust system
- Hydraulic gear shift system with low speed mode as standard
- Water in oil sensor
- Oil change from inside the boat
- Nickel Aluminum Bronze and stainless steel in all main under water components
- Complete range of propellers available
- Several optional jackshaft lengths



Electronic Vessel Control (EVC)
- Fully integrates the engines, electronics and the unique set of EVC features, such as Assisted Docking, Joystick Driving, Dynamic Positioning System, Glass Cockpit and more.

Exhaust aftertreatment system
- SCR (Selective Catalytic Reduction)
- Aqueous UREA solution 32% or 40%
- Complete system – developed, certified, and serviced by one company
- Fully integrated capabilities
- Prop-to-helm system (IPS)
- SCR unit reduces noise by up to 35 dBA
- Wide range of installation options available

Connectivity
- Integrated into the EVC system for complete driveline connectivity
- Remote diagnostics and proactive maintenance by dealers
- Fleet health and productivity monitoring for end customers
- Secure connectivity via embedded cellul connectivity or onboard Wi-Fi router

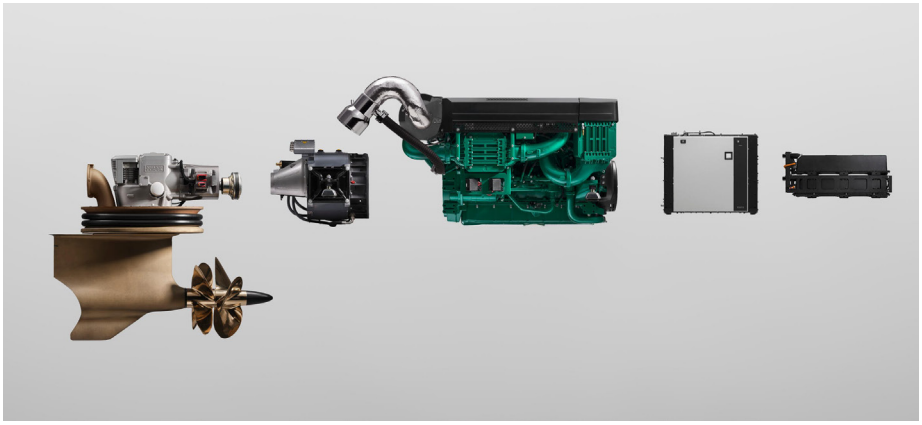

Not all models, standard equipment and accessories are available in all countries. All specifications are subject to change without notice. The engine illustrated may not be entirely identical to production standard engines.

Contact your local Volvo Penta dealer for more information regarding Volvo Penta engines and optional equipment/ accessories or visit www.volvopenta.com

AB Volvo Penta
SE-405 08 Göteborg, Sweden
www.volvopenta.com

English 07-2026 © 2026 AB Volvo Penta.